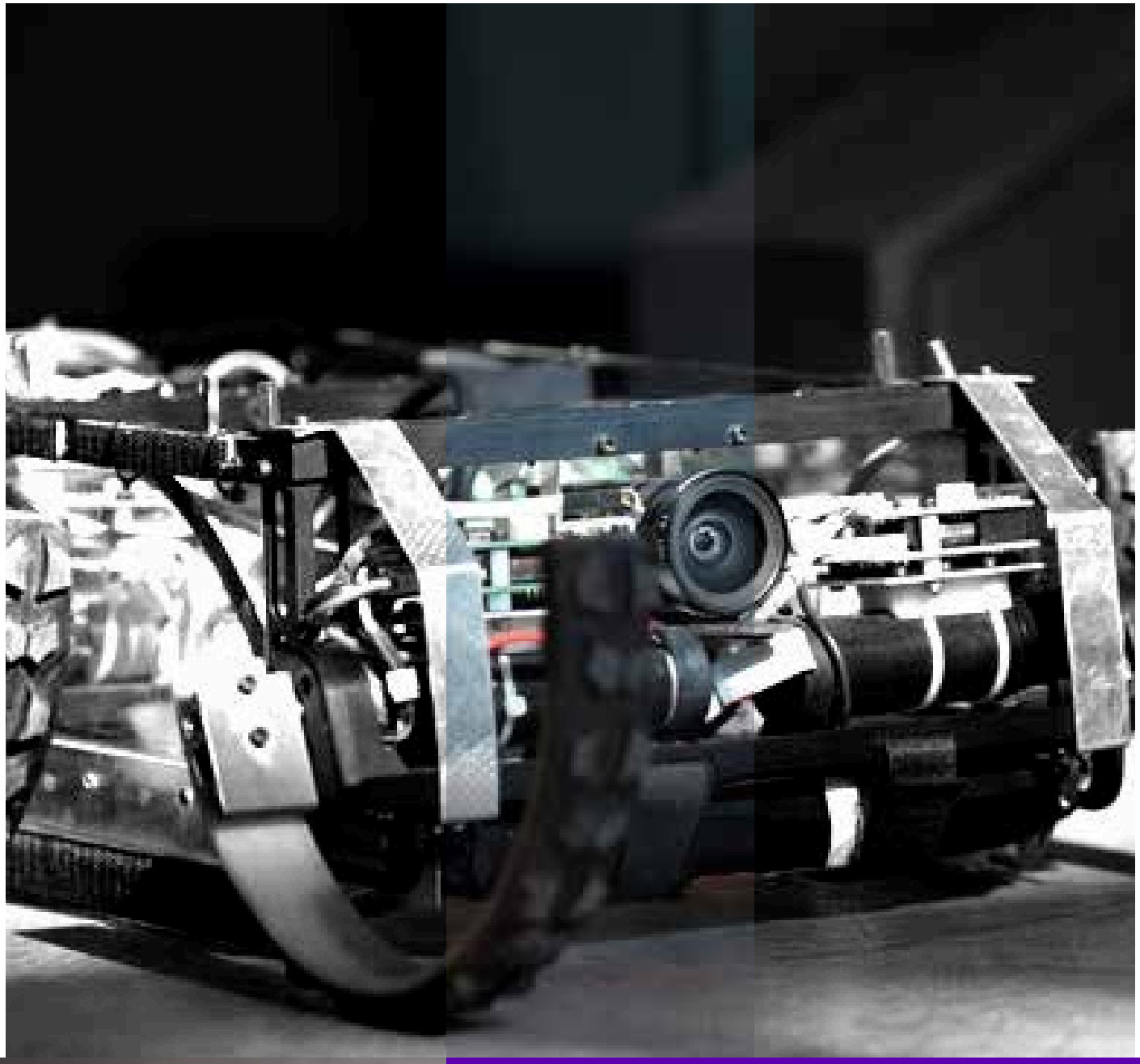

Machinery and Manufacturing

Contents

Machinery and Manufacturing · 19 inventions

ODTÜ-34	A Novel Modal Superposition Method Using Response Dependent Non-Linear Modes for the Periodic Vibration Analysis of Large Non-Linear Structures	3
ODTÜ-36	Compact Holographic Spectrometer Using a Spatial Light Modulator	4
ODTÜ-45	Optical Spectrometer Based On Alternating Diffractive Optical Elements	5
ODTÜ-61	A Winding Method for Electrical Machines	6
ODTÜ-66	A New Test Stand for Micro Unmanned Aerial Vehicles	7
ODTÜ-67	An Integrated Si-based Platform For Observation Of Micro-nanoscale Radiative Transfer	8
ODTÜ-73	Cost Effective Fiber Optic Pressure And Strain Sensors By Fiber Loop Ringdown Spectroscopy (FLRDS) Technique With 1550 Nm LED Light Source	9
ODTÜ-79	Detachable Anchors with Bolted Corners for Steel-Concrete Composite Structures	10
ODTÜ-81	Thorax Impactor To Be Used In Pedestrian Protection Tests	11
ODTÜ-83	Fast and High Resolution LIDAR with Multi-axis and Multi-surface Polygon Scanner	12
	A Neck Model Where Neck Injuries Can Be Examined	13
ODTÜ-122	A Method For Fabrication Of A Substrate For Surface Enhanced Raman Spectroscopy	14
ODTÜ-115A	Swirl-Assisted Chip Collection System Operating with Vacuum and Compressor	15
ODTÜ-115B	A Head, Device, and Method For Vacuumed Machines	16
ODTÜ-162	Cycloid Integrated Axial Flux Actuator	17
ODTÜ-178	Self-Starting Dual-Speed Synchronous Reluctance Motor	18
ODTÜ-40	REHBER: Electric Wheelchair	19
ODTÜ-200	Electrode-Feedback Bee Feeding Spoon	20
ODTÜ-184	Full Touch-Mode Capacitive Pressure Sensor	21

A Novel Modal Superposition Method Using Response Dependent Non-Linear Modes for the Periodic Vibration Analysis of Large Non-Linear Structures

tto.metu.edu.tr
tto@metu.edu.tr

Fast and Accurate Dynamic Solutions of Non-linear Engineering Structures

Advantages

Speed: It enables faster analyses than those in the literature
Accuracy: It gives high accurate results
Feasibility: It can be applied to realistic large structures
Usability: It can be used for different types of non-linear elements
Outputs: It enables to compute frequency response functions (displacement vs frequency plots) and different outputs such as nonlinear resonance frequencies of the system.

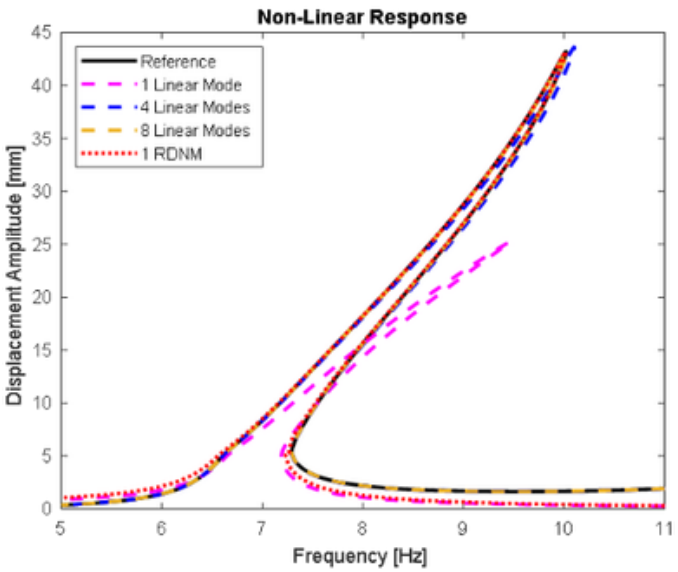

Development of Response Dependent Non-Linear Modes (RDNM), which reduce the high computational burden in dynamic response analyses of realistic non-linear systems.

Minimizing the number of nonlinear algebraic equations in periodic solutions of non-linear systems with a modal superposition method developed by using RDNMs.
RDNMs are new modes obtained by modifying the underlying linear system at every solution point. They change with the system response so that they create a more accurate basis in the dynamic solutions of non-linear structures.

They are calculated by solving the eigenvalue problem in different modal domains for complex and large systems. This enables to perform fast analyses without sacrificing the response accuracy. Thus, design iterations of industrial applications can be carried out in a more efficient and rapid manner.

Compact Holographic Spectrometer Using a Spatial Light Modulator

tto.metu.edu.tr
tto@metu.edu.tr

A Compact Spectrometer System With High-resolution And High Signal-to-noise Ratio

High-resolution spectrum analysis with a compact system

Advantages

Compact design: Ability to analyze the spectrum with increased degrees of freedom achieved with a single SLM, independent of the detector distance

High-resolution: Detection of tiny wavelength differences by using an SLM with a high number of pixels

High signal-to-noise ratio: Less signal loss due to fewer optical elements

Broad bandwidth: Detection of the whole spectrum by increasing the degrees of freedom of the spatial light modulator

Lower costs: Cheaper production costs compared to the equivalent systems offering similar resolution and bandwidth

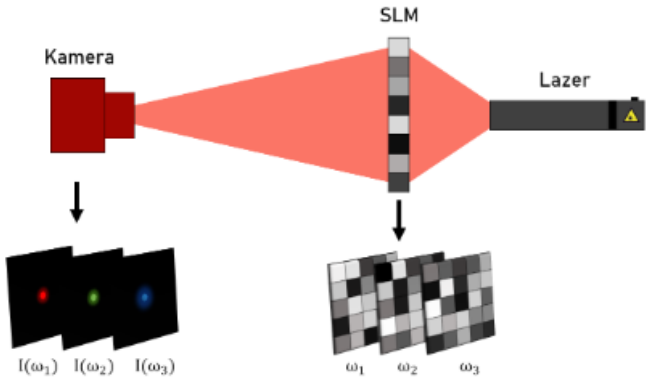

A new method, which does not require the prisms or gratings used in conventional spectrometers, has been developed, and with the help of a single spatial light modulator (SLM) it has become possible to build a high-resolution spectrometer.

To achieve high resolution in conventional spectrometers, high-cost diffractive optical elements (prisms, gratings, etc.) that are more sensitive to different wavelengths or large system designs that increase the detector distance are needed. In these types of spectrometers, the signal-to-noise ratio decreases as the number of optical elements increases. In addition, when spectrum analysis of a broadband light source is desired, a very large area must be scanned in the detector region.

This invention presents an innovative broadband spectrometer design having high-resolution, high signal-to-noise ratio, where a spatial light modulator (SLM) is used instead of a diffractive optical element. The invention also presents a measurement technique in which the desired results can be obtained. By increasing the pixel number (degrees of freedom) of the spatial light modulator, it is possible to reach the promised high-resolution, high signal-to-noise ratio and broadband scanning capability without the need of adding extra optical elements or changing the distances in the design.

Optical Spectrometer Based On Alternating Diffractive Optical Elements

tto.metu.edu.tr
tto@metu.edu.tr

Compact Optical Spectrometer With High Spectral Resolution

Compact, high sensitive, low photon requiring and broad-band operating optic spectrometer

Advantages

Compact: No requiring heavy and bulky optical items.

Efficient: High throughput sample/analyte detection.

High performance: High S/N ratio measurement.

Sensitive: Trace amount of sample detection.

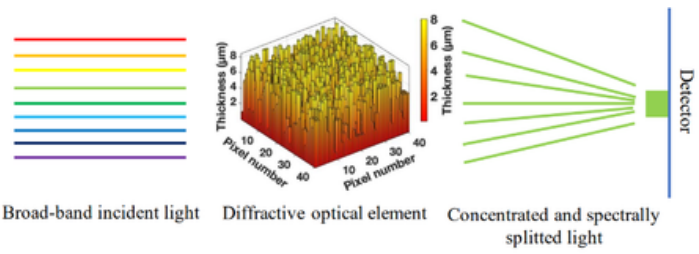

Spectral splitting of broad-band light using diffractive optical elements designed for individual wavelength of light.

In this study, for time to our knowledge, an optical spectrometer is developed with diffraction optical elements designed for each wavelength and placed on a moving part. Compared to optical spectrometers constructed with a single prism or diffraction grating and operating in narrow-band, our spectrometer can operate under broadband light. In addition, the decrease in the number of photons seen after the prism and diffraction grating is reduced/eliminated by this invention. With this study, in addition to the increase in the number of photons, a high signal/noise ratio can be obtained, and sample/analyte detection will be performed in a shorter time. The diffraction optical elements used provide the concentration of light as well as spectral separation. With this feature, our invention reduces the need for focusing optical elements (lens, etc.) used in the system.

A Winding Method for Electrical Machines

tto.metu.edu.tr
tto@metu.edu.tr

An Electric Machine Winding Made Of Thin Electrically Conductive Sheet

The invention relates to a winding method used in electrical machines, which is obtained by various cutting and bending processes of an electrically conductive sheet in the form of a U or V shape, using planar cutting tools such as a water jet, laser etc.

Advantages

Ease of manufacturing: Obtained by cutting and bending processes from the plate without the need for winding machine

High efficiency: High efficiency thanks to shortened end winding lengths

Low cost: Low cost due to ease of manufacturing compared to conventional windings

High current: Capable of meeting high current demands thanks to large cross-sectional area

High fill factor: High fill factor compared to conventional windings thanks to the rectangular cross-section

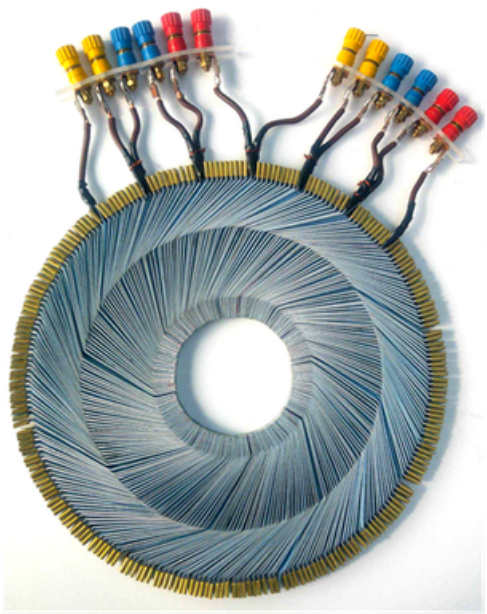

A low-cost, easy-to-manufacture winding method for electric machines, which can meet the requirement of high current ratings and increase the machine performance

The thin electrically conductive bendable sheet is cut in U or V shapes with planar cutting tools, such as water jet or laser to obtain an unbent electrical machine winding. The obtained part is bent from at least one bending point, such as lower, middle and upper bending points. The parts obtained in this way are placed around a circle, and electrical connection is provided by joining them at the ends of the windings. Electrical isolation of adjacent electrical machine windings is provided by the electrical insulation material placed between them. The electric machine winding, which is the subject of the invention, is combined in different combinations according to the requirements of the electric machine, such as the number of poles, the number of phases, voltage or current ratings.

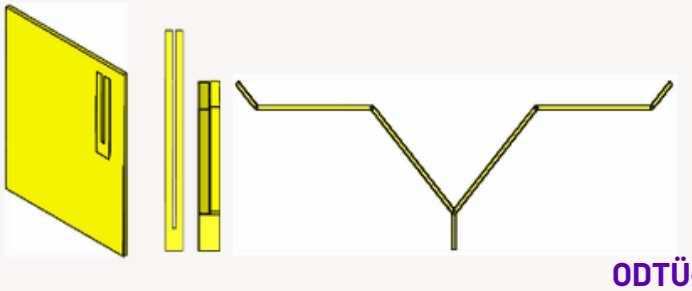

ODTÜ-61

A New Test Stand for Micro Unmanned Aerial Vehicles

tto.metu.edu.tr
tto@metu.edu.tr

MAV Test Stand

The presented test stand design represents a vertical link model for flapping wing micro air vehicles with adjustable stroke plane, being aerodynamically efficient, enabling force and moment measurement in wind tunnels.

Advantages

Useful: Ability to test different Micro Air Vehicles (MAVs) and to be revised according to the required size

Functional: Testing inside the wind tunnel at different flapping stroke planes

Efficient: Aerodynamically efficient as a result of covering the vertical fixing part with a symmetrical airfoil section

Easy assembly and adjustment: By use of the connectors, it can be easily mounted both to the wind tunnel and to the MAV and can be adjusted according to the desired height.

Parametric measurement capability: Time-dependent force and moment measurement at different wing flapping motions, angles and frequencies

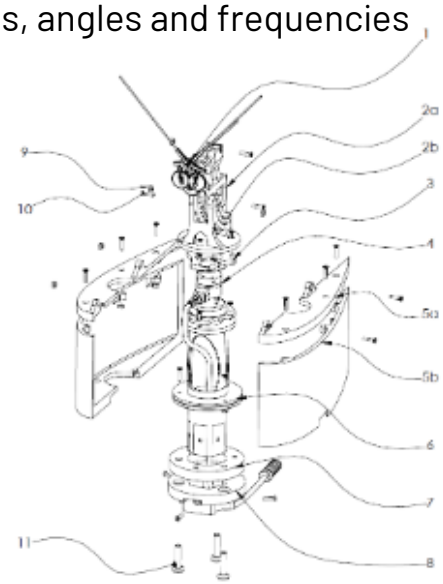

The invention is a wind tunnel mountable test stand developed for micro-air vehicles belonging to the class of unmanned vehicles that have attracted attention in recent years.

In this invention, it is aimed to design an economical and rapidly accessible test fixture that is resistant to system loads in order to accurately perform the wing characterization studies of any micro air vehicle studied. The present invention represents an aerodynamically efficient vertical linkage with an adjustable flapping stroke plane. In this framework, a new angle adjustment apparatus with 5 degrees sensitivity, consisting of two different "u-profile" parts that can be inserted into each other, is used. Thus, the presence of any connection element under the wing is prevented. To make the preferred vertical link pattern aerodynamically efficient, the sensor is covered with a symmetrical wing section that wraps the connecting cables and the vertical fixing beam.

An Integrated Si-based Platform For Observation Of Micro-nanoscale Radiative Transfer

tto.metu.edu.tr
tto@metu.edu.tr

An Integrated Si-based Platform For Micro-nanoscale Radiative Transfer

The integrated platform of this invention has the potential to clear off the requirements of highly controlled and complicated vacuum conditions and laboratory environment.

Advantages

Environment conscious: Waste heat input of proper temperature and quality.
Efficient materials and processes: Proper selection of material and system configuration.
Functional: Operation outside of the controlled laboratory environment.
High sensitivity: Can be achieved by this integrated device or its variations.
Efficient: The possibility of obtaining useful energy output.

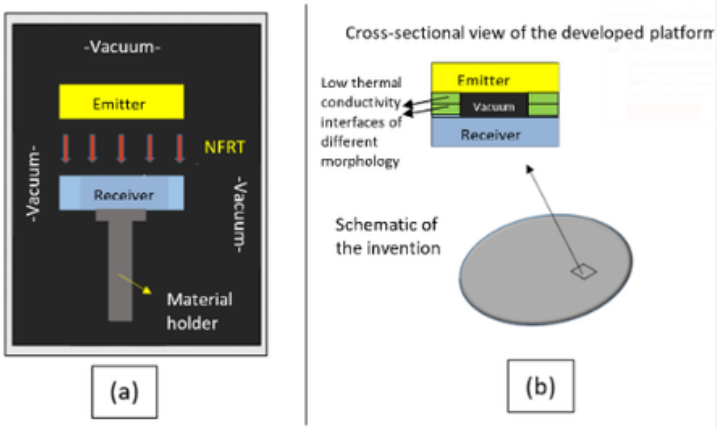

The integrated platform of this invention covers two parallel aligned objects located in a way that near-field radiative transfer (NFRT) between them is possible.

The novelty behind this invention is that it enables conversion of the NFRT into useful energy (e.g., electric energy) outside of the laboratory environment.
In the literature, systems developed for investigation of NFRT typically require vacuum environments (Figure (a)). In these systems, materials exchanging NF thermal radiation are located separately (i.e., not in an integrated way) using high-precision micro-nano positioners to ensure the suitability of the configuration for NFRT. In spite of that, this invention (Figure (b)), since it is an integrated platform, and its possible variations have the potential to be used under standard operating conditions once the materials are held at the required temperatures.

Cost Effective Fiber Optic Pressure And Strain Sensors By Fiber Loop Ringdown Spectroscopy (FLRDS) Technique With 1550 Nm LED Light Source

tto.metu.edu.tr
tto@metu.edu.tr

LED based FLRDS fiber optic pressure and strain sensors

Fabrication and applications of highly sensitive, cost effective fiber optic pressure and strain sensor by keeping FLRDS features and using LED light source

Advantages

High sensitivity
Real time measurement
Continuous monitoring
Immunity to electrical fluctuations
Portability
Possibility to be used in fully closed structures
Use in structural monitoring such as buildings, bridges etc.

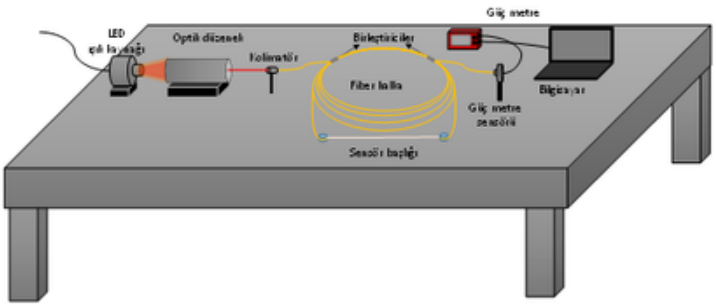

This invention with implementation of a LED source provides simplification of a system without loosing advantegous features of FLRDS technique, and provides cost effective portable new design making it readily avaliable for many applications in greater numbers such as structural monitoring.

A light pulse is trapped into a single mode fiber loop and travels very many round trips until it fades. Since the light loss in the fiber system changes only on the sensor region once the system is set, the system becomes highly sensitive to interaction of light with the environment at the sensing region, thus technique allows to very sensitively monitor pressure and strain changes around the fiber.

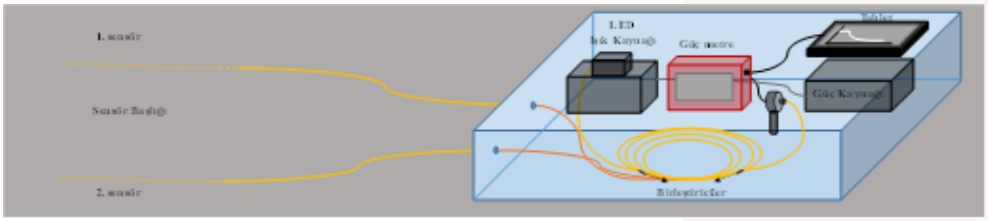

Detachable Anchors with Bolted Corners for Steel-Concrete Composite Structures

tto.metu.edu.tr
tto@metu.edu.tr

The invention proposes a removable anchor with a completely new geometry.

Advantages

The most important advantage of the inventive anchor is its low cost.

First of all, by reducing the length of the high strength bolt used, the material usage is reduced.

In addition, an anchor that can be produced quickly using standard cornice elements has been obtained.

The advantages of the anchor are that it is removable, has high strength and can be used with precast reinforced concrete slabs.

Thanks to the developed anchorage, the use of sustainable building systems will increase.

The invention relates to a detachable anchor with a bolted cornice for steel-reinforced concrete composite structures with a new geometry.
A demountable anchor that will improve the behavior of existing demountable anchors and reduce cost and labor has been developed and mechanical tests of the anchor have been completed. This product, which is called bolted anchor with 30 corners, is formed by combining standard elements that are easily available in the market.
No lathing process is required.
The sliding problem can be minimized as a result of the holes to be drilled in the cornice and steel beam head can be drilled close to zero tolerance.
A frictional interaction joint can also be obtained by giving pre-pull to the bolts.
The developed anchor is superior to existing anchors in terms of capacity and stiffness.

Thorax Impactor To Be Used In Pedestrian Protection Tests

tto.metu.edu.tr
tto@metu.edu.tr

Pedestrian Thorax Impactor

The invention is an impactor that represents the thorax regions of pedestrians and that enables the evaluation of pedestrian injuries with tests which are caused by flat front vehicles.

Advantages

Novel: This invention will enable to perform tests in order to evaluate pedestrian thorax injuries.
Reliable: The reliability of the test results obtained by using this impactor is validated with several Finite Element Analyses and pyhsical tests.
Robust: Pedestrian protection tests are very severe. This invention is designed such that it will be used without getting damaged in the tests.
Low Cost: The test dummies and impactors used in this field are supplied from limited number of companies abroad and they are very expensive. This invention is designed such that it can be manufactured with low cost.
Producible: The impactor is designed such that it can be produced by local manufacturing sites with a low cost and the production is already completed.

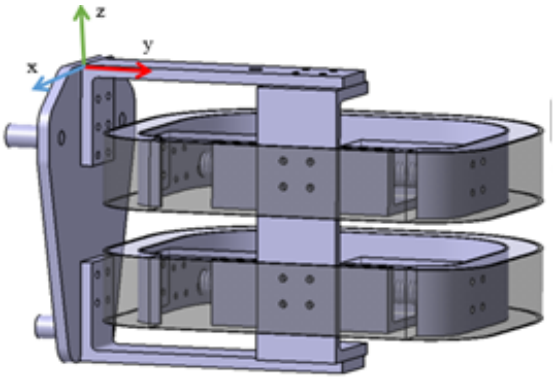

Reliable, robust, affordable impactor to evaluate pedestrian thorax injuries with tests

Pedestrian protection standard tests are defined to evaluate the injuries that are observed in different parts of the pedestian bodies in vehicle-pedestrian accidents. In the present case, pedestrian protection tests are being performed with standard test impactors that only represent the head, upper leg and lower leg regions of the body. However, no standard impactor that represents the thorax region of pedestrians is available and no tests can be performed to evaluate the injuries in this region. Therefore, the thorax impactor in this patent, which represents the thorax region of pedestrians and which is designed to be used with linear impactors in pedestrian protection tests, is novel and does not have an equivalent in the World. The thorax impactor in this patent will enable the automotive companies to validate their vehicle front designs with physical tests in terms of pedestrian thorax injuries.

Fast and High Resolution LIDAR with Multi-axis and Multi-surface Polygon Scanner

tto.metu.edu.tr
tto@metu.edu.tr

MultiScan-LIDAR

The multi-surface scanner is equipped with optical guides at different angles. Each optical guide can scan in both horizontal and vertical planes.

Advantages

It provides the advantage of using the speed advantage obtained with circular motion linearly.

It is a system that can be easily produced with a 3D printer or CNC

Scanning in both horizontal and vertical axis with a single polygon

Multi-axis and multi-surface polygon design provides fast and high resolution.

Since there is no need for a second polygon, it provides an advantage in automation between units.

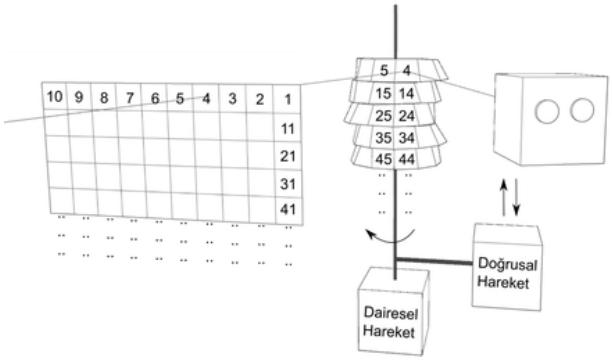

Polygon and mirror-based LIDAR systems scan with two polygons positioned for the vertical and horizontal axis.

With our invention, we make it possible to perform two-axis scanning quickly with a single polygon. In this way, we have significantly reduced the size of the product and eliminated the costs arising from the production and synchronization of the second polygon.
The biggest advantage of our invention is that by placing the optical guiding elements used in polygons at different angles, it is possible to perform high-resolution spatial scanning in both horizontal and vertical axes with a polygon. Our invention differs from existing systems with this feature.

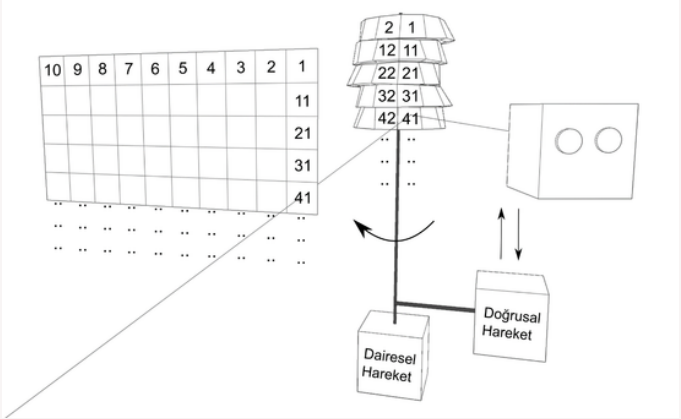

A Neck Model Where Neck Injuries Can Be Examined

tto.metu.edu.tr
tto@metu.edu.tr

A cheap and directly applicable new neck model for neck injury crash tests

Advantages

Practical: Directly applicable to the available crash test dummies
More realistic results: More similar results to the human movements
More Data: More data can be gathered with the new sensors wrt to the original Hybrid III neck
Cheap: A very cheap solution wrt the available complex and special dummy solutions
Scaleable: The design can directly to be applied to the 5th and 95th percentile Hybrid III dummies by scaling.

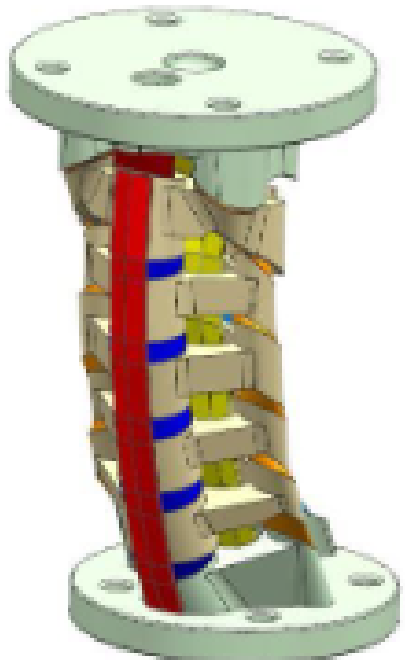

Cheap, fast and more realistic neck injury crash test results and applicable to the available dummies.

Hybrid III 50 percentile male crash test dummies are the most commonly used test devices of the crash test centers all over the world. This invention which is directly applicable to these test dummies provides more realistic test results with respect to the original Hybrid III dummy neck. Additionally, it is a way cheaper and faster solution with respect to the other available dummy solutions for neck injury research tests.

Available Hybrid III 50 % crash test dummies neck model is an old design and it behaves in an unrealistic way especially for low speed neck injury tests. This invention is based on the real human cadavear data in both geometry and material wise. The steel cable and neck jacket addition for the muscles behaviour provides more realistic movements under crash conditions.

A Method For Fabrication Of A Substrate For Surface Enhanced Raman Spectroscopy

tto.metu.edu.tr
tto@metu.edu.tr

A method for fabricating SERS substrates

This invention relates to fabrication of a plastic based substrate comprising a metal film with controlled surface properties developed for detection of target molecules by using surface enhanced Raman spectroscopy.

Advantages

Fast and cost-effective production: The gold film can be produced within approximately 10 seconds using an ultrasonic welding device, which is a relatively low-cost equipment. Obtaining the gold film on a plastic surface can further reduce the cost.

Controllable surface roughness and pattern: The method used in the substrate production allows for direct control of the surface roughness and micro-pattern on the gold film. Therefore, it is possible to obtain SERS substrates according to specific needs.

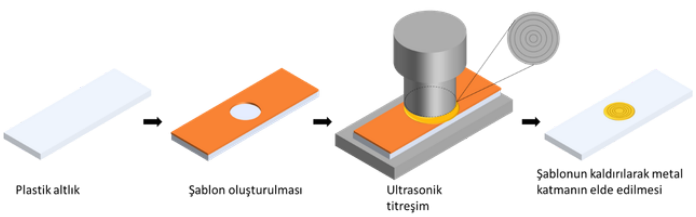

Fabrication of a plastic-based substrate with a metal layer with controllable surface properties for target molecule detection by Raman spectroscopy

Surface-enhanced Raman spectroscopy (SERS) substrates, which are used for molecular identification, are known to increase the Raman signal when their surfaces have a regular roughness. Invented SERS substrate consists of a gold film with a specific micro-pattern and controllable surface roughness on a plastic substrate. The pattern and roughness on the film contribute to the enhancement of the Raman signal.

The gold film used as the SERS substrate is obtained by pressing gold nanoparticles onto a plastic substrate with the aid of a sonotrode under ultrasonic vibration. The duration of ultrasonic vibration directly affects the surface roughness, while the micro-pattern on the sonotrode can be transferred onto the metal film. This allows for the creation of gold surfaces with the desired roughness and a specific micro-pattern.

tto.metu.edu.tr
tto@metu.edu.tr

Swirl-Assisted Chip Collection System Operating with Vacuum and Compressor

Chip Collector Apparatus

Effectively collecting chips emitted during machining operations through the combined effect of high-pressure air and vacuum.

Advantages

High Quality Surface: Removing heat generated during machining with airflow reduces surface roughness and prevents material degradation caused by high temperatures.

Long Tool Life: In dry operations, tools naturally heat up and lose efficiency. Air-cooled tools can machine more material compared to hot conditions.

Clean Working Environment: Collecting chips at the source prevents discomfort and protects the operator, ensuring a cleaner workspace.

Easy Recycling Separation: Chips collected directly in sterile bags reduce the need for cleaning before recycling.

Increased Recycling Efficiency: Instant chip collection significantly improves recycling performance.

Preparing the chips for recycling with minimal impact from external factors (dust, dirt, etc.), providing cooling during processing to ensure higher quality part production, and maintaining a longer lifespan for the cutting edge.

The vacuum power alone is not sufficient for collecting chip particles; with the assistance of high-pressure air, the chips are aerated in a controlled manner and transported to areas where the vacuum is strong, allowing for the collection of much larger chip particles. The airflow that is effective in collecting chips in the area where they are generated also cools the tool and the machined surface at high speeds through convective heat transfer.

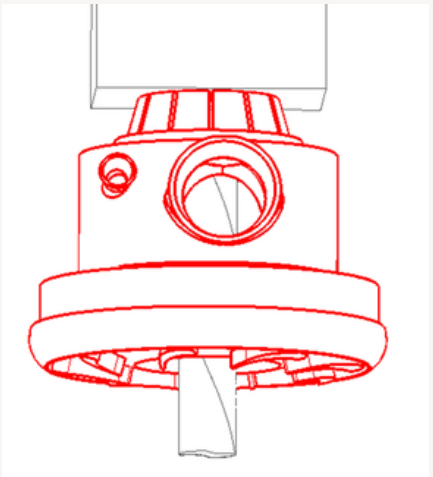

ODTÜ-115A

tto.metu.edu.tr
tto@metu.edu.tr

A Head, Device, and Method For Vacuumed Machines

Dual-Pressure Chip Collection Head

The invention effectively collects the chips generated during machining by combining the effects of the high pressure obtained through the rotational energy of the spindle and the external vacuuming system.

Advantages

High Quality Surface: Removing heat generated during machining with airflow reduces surface roughness and prevents material degradation caused by high temperatures.

Long Tool Life: In dry operations, tools naturally heat up and lose efficiency. Air-cooled tools can machine more material compared to hot conditions.

Clean Working Environment: Collecting chips at the source prevents discomfort and protects the operator, ensuring a cleaner workspace.

Easy Recycling Separation: Chips collected directly in sterile bags reduce the need for cleaning before recycling.

Increased Recycling Efficiency: Instant chip collection significantly improves recycling performance.

During machining, chips that cannot be collected solely by vacuum power are removed by the high-pressure air stream generated from the spindle's rotational energy. Thus, no additional compressor is required, the vacuum efficiency is enhanced, and the power demand is reduced.

Chip particles that cannot be collected solely by vacuum power are directed to the vacuum region by the high-pressure air flow generated by the spindle's rotating impeller. This allows larger chips to be collected and improves the overall vacuum efficiency. In addition, the blades in the central vacuum region create a counterflow that supports the airflow of the external vacuum, further enhancing suction performance.

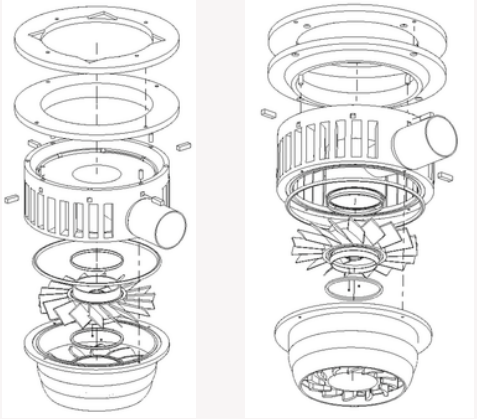

ODTÜ-115B

tto.metu.edu.tr
tto@metu.edu.tr

Cycloid Integrated Axial Flux Actuator

CycloMotor

The cycloid gear element also serves as the stator in the axial flux motor, and due to the absence of axial displacement, the air gap remains constant.

Avantajlar

- Emsallerine göre yüksek tork yoğunluğu
- Emsallerine göre yüksek güç yoğunluğu
- Tahrik sisteminde daha az sayıda bileşen içerme
- Kompaktlık
- Dişli entegrasyonu

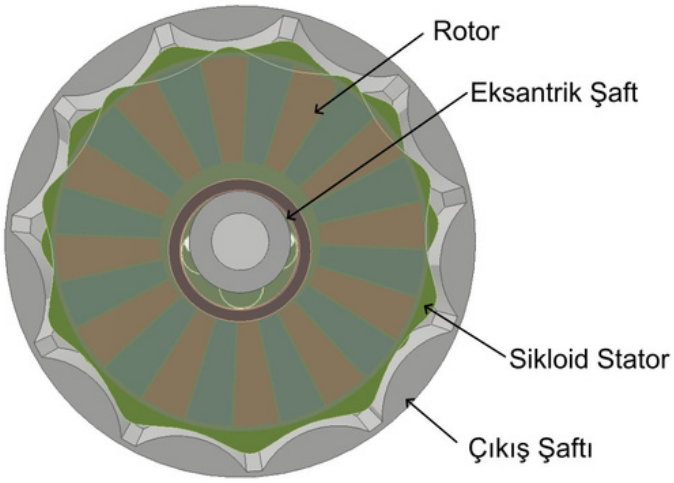

It reduces the number of components in the drive system, offering a more compact design while providing high torque and power density for increased system efficiency.

The cycloid disk used as a gear element also functions as the stator, containing the windings in the axial flux motor. Since the cycloid disk does not perform axial displacement, the air gap remains constant. The gear-integrated system increases torque density.

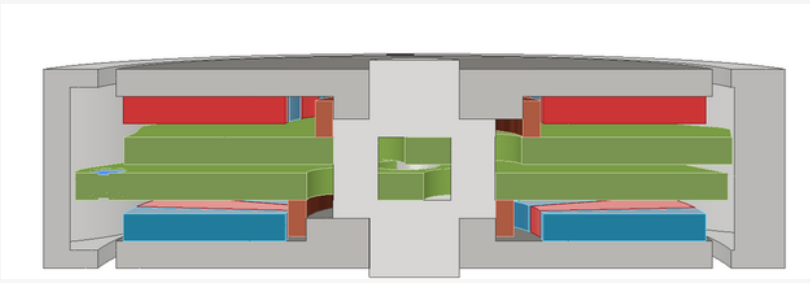

Self-Starting Dual-Speed Synchronous Reluctance Motor

tto.metu.edu.tr
tto@metu.edu.tr

Dual-Speed Synchronous Reluctance Motor

Two-speed operation and self-starting

Advantages

Two speeds: Operation at two different speeds by changing the connection

High efficiency: Higher efficiency than equivalent motors

High power density: Higher power density than equivalent motors

Simple production: No changes required to the stator or rotor

Self-starting: Starts without a drive thanks to the squirrel cage

The synchronous reluctance motor is connected using dual-speed winding schematics so that it can run at two separate speeds, and a squirrel cage is added so that it can start by itself.

Synchronous reluctance motors stand out for their high efficiency and simple structure, but they usually run at a single speed and need a drive to start.

In the invention, the motor can be used at two different speeds simply by changing the connection, without any modification to the stator or rotor. Thanks to the squirrel-cage structure added to the rotor, the motor can also start by itself.

REHBER: Electric Wheelchair

tto.metu.edu.tr
tto@metu.edu.tr

Stair-Climbing Electric Wheelchair

Climbs stairs without extra apparatus

Advantages

Stair climbing: Climbs stairs on its own, without ramps or additional apparatus

Easy manoeuvring: Moves on its steering wheels with the front wheels lifted on flat ground

Ergonomic and safe: The balance element keeps the user parallel to the ground while climbing

Independent range: Battery power lets the user move between floors without external equipment

Cost and time savings: Buildings do not need ramps at stairs

Removes the need for ramps at stairs, allowing wheelchair users to overcome stairs independently in existing buildings.

The invention is an electric wheelchair that moves on flat ground and climbs stairs without any extra apparatus, while keeping the user parallel to the ground at all times.

On flat ground, the front wheels are lifted and the wheelchair moves on its steering wheels, which makes manoeuvring easy. When a staircase is reached, the front wheels touch down and the steering wheels are lifted, so that the wheelchair can climb the stairs.

Throughout this motion, a balance element keeps the seat and the user parallel to the ground. The wheelchair is battery-powered and needs no external apparatus to climb stairs.

Electrode-Feedback Bee Feeding Spoon

tto.metu.edu.tr
tto@metu.edu.tr

Smart Bee Feeding Spoon

Feeding with real-time electrode feedback

Advantages

Less solidification: Food is exposed to air only during feeding, then retracted

Electronic verification: Electrodes confirm that the food has reached the spoon

Reliable feeding: Real-time position feedback controls each feeding cycle

Easy cleaning: Retracting the food keeps the spoon and channel clean

High-viscosity ready: The syringe-pump drive suits highly viscous food that is hard to dispense

Viscous bee food solidifies when exposed to air. In the invention, the food is held in the spoon only during feeding and then retracted, while electrodes electronically confirm that it has reached the spoon.

The device consists of a spoon body connected to a syringe pump that drives the viscous food through a flow channel.

Rear, middle, front and ground electrodes placed along the channel are read by a microcontroller, which detects the position of the food in real time.

Using this feedback, the system operates in standby, filling and retraction modes: the food is advanced to the spoon for feeding and drawn back afterwards to limit its contact with air.

Full Touch-Mode Capacitive Pressure Sensor

tto.metu.edu.tr
tto@metu.edu.tr

Intrinsic Touch-Mode Capacitive Sensor (ITMCS)

Touch-mode operation even at zero pressure

Advantages

Linear response: Intrinsic touch mode gives a more linear capacitance-pressure relationship

Zero contact threshold: The sensor works in touch mode from zero gauge pressure

High sensitivity at low pressure: Effective sensing even near zero pressure

Flexible design: With no contact-threshold constraint, diaphragm geometry can be chosen freely

Easy calibration: The linear relationship reduces the need for complex signal processing

A capacitive MEMS pressure sensor that keeps its diaphragm in permanent contact through controlled stiction, operating even at zero pressure for more linear measurement and fewer design constraints.

ITMCS is based on a MEMS structure consisting of a diaphragm positioned over the bottom electrode and a gap between two insulating layers. Its key feature is that, thanks to controlled stiction during fabrication, the diaphragm adheres permanently to the bottom electrode.

Because the diaphragm is in contact even at zero pressure, the device operates directly in touch mode without needing a pressure-induced contact threshold. When pressure is applied, the diaphragm deflects elastically and widens the contact area; capacitance changes through the growing contact area rather than a shrinking gap. This provides a direct capacitance-pressure relationship even near zero pressure.